User manual record system 20

automatic door systems - this is record!

record
your global partner for entrance solutions

Translation of the original manual

record.group

Table of contents

Table of revisions

D

S

U

1 Safety instructions and regulations

1.1 Presentation of warning signs

Various symbols are used in this guide for easier understanding:

NOTICE

Useful advice and information to ensure correct and efficient workflow of the system.

IMPORTANT

Specific details which are essential for trouble-free operation of the system.

IMPORTANT

Important details which must be read for proper function of the system.

⚠ CAUTION

Against a potential hazardous situation that can lead to minor personal injury and property damage.

⚠ WARNING

Against a latent hazardous situation that can lead to severe injuries or death and cause substantial property damage.

⚠ DANGER

Against an imminent hazardous situation that can lead to severe injury or death.

⚠ DANGER

Against an imminent or latent hazardous situation that could lead to electric shock and cause serious injury or death.

1.2 General safety and accident prevention regulations

NOTICE

This system is not intended to be used by persons (including children from the age of 8) with limited physical, sensory or mental abilities or with a lack of experience and/or knowledge. Unless they are supervised by a person responsible for their safety or have received instructions from that person on how to use the system.

Supervise children and ensure that they do not play at the system.

IMPORTANT

Do not allow children to play with the device or its regulating and/or control devices, including remote controls.

IMPORTANT

When using motion detectors, make sure that no moving objects such as flags, plants, etc. enter the detection areas of the motion detectors

IMPORTANT

In order to avoid malfunctions, the system must *NOT* be disconnected from the mains overnight!

IMPORTANT

If malfunctions that endanger the safety of individuals occur, the system must be turned off. It may not be turned back on until the problem has been resolved by a professional and the danger no long exists.

IMPORTANT

Safety devices (e.g. sensors, protective wings) must not be dismantled or put out of operation.

⚠ CAUTION

Malfunctions and risk of falling from debris gathering under the floor mat!

- Door breakdown, bruises, broken bones
- ➢ The floor mat or floor covering must be even and securely installed.
- ➢ Debris that gathers under the floor mat must be removed regularly.

⚠ CAUTION

Unexpected OPENING / CLOSING / ROTATION

- Bruises and contusions from the door wings/apron
- ➢ No persons or objects are allowed in the opening area of the door.
- ➢ No safety devices (sensors) should be removed or disabled.
- ➢ Do not rush through a door that is already closing.

⚠ DANGER

Electric shock

- Electric shock, burns, death.
- ➢ Disconnect the drive from the power supply during cleaning, maintenance and replacement of parts.

1.3 Danger zones

1.3.1 Security- and surveillance equipment

The passages of the plant are monitored by sensors. It is important that they work faultlessly and are under no circumstances set out of service.

1.3.2 Danger warnings on the product

If necessary, the country specific regulations have to be adhered to.

1.3.3 Reconstructions and changes to the product

Unauthorized modifications to the installation will release the manufacturer from all liability for any resulting damage.

1.4 State of technology

This system was developed using state of the art technology and officially recognized technical safety regulations. The system, depending on its options and diameter, comply with the requirements of the Machine Guidelines 2006/42/EG as well as EN 16005 and DIN 18650 (D).
Nevertheless, danger may arise if not used as intended.

IMPORTANT

Installation, commissioning, inspection, maintenance and repair work may only be conducted by qualified, trained and authorized technicians.
After commissioning or repair work, fill in the check list and give it to the customer for safe keeping.
We recommend obtaining a service agreement.

1.5 Intended purpose of use

The system is designed exclusively for use as a pedestrian passage. The installation may only occur in dry areas. If there are deviations then proper waterproofing and water drains will be required on-site.
Any other application or use beyond this purpose is not considered to be an intended purpose. The manufacturer bears no liability for any resulting damage; the operator alone shall bear the associated risk.
The intended purpose also includes observation of the operating conditions specified by the manufacturer, in addition to regular care, maintenance and repair.
Interventions in or alterations to the installation performed by non-authorized maintenance technicians exclude the manufacturer's liability for consequential damages.

1.6 Control of safety devices

Beside the maintenance carried out at regular intervals by a service technician or authorised person, it is recommended, for additional safety, that the operator regularly controls the essential elements of the door. You will find a check-list of the functions to be tested monthly at the end of this document.

1.7 Storage of the manual

After the installation of the system, the instructions should be stored in an accessible and dry place.

2 General information

2.1 Document identification

Name:	BAL_SYS20_EN_2V6_REC_102-020110469
Version:	V2.6
Item No.:	102-020110469
Publication date:	03/2019

2.2 Application range

NOTICE

System 20 includes the following door drives for which these instructions apply.
STA / TSA 20 or 21 or 22, Thermcord, Safecord

2.3 Target groups (User)

This operating manual is intended for the target groups listed below:

- Operating entity of the system:
  the person who is responsible for the technical maintenance of this system
- Operator of the system:
  the person who operates the system every day and has been suitably instructed

The handling of the system is explained with the help of this operating manual. It forms the basis of fault-free working and gives instructions for the procedures to follow for rectifying any faults that may occur. Extracts of this document can also be made accessible to persons entrusted with the day-to-day operation of the system.
The operating entity of the system must read this operating manual before commissioning the system, and follow the safety instructions.
It is recommended that this document should be kept handy in the vicinity of the automatic system.

2.4 Door care

The entire system, including the sensors and safety devices, can be cleaned with a moist cloth and standard commercial cleaners (non-scouring, do not use any solvents). First test the cleaners on a hidden (not easily visible) place. Keep all guides free of dirt.

NOTICE

It is recommended that for carrying out this work, the operating mode (Locked) or (Continuously open) be used, so as to avoid possible injuries from unwanted door movements.

2.5 Maintenance and regular inspection

Prior to carrying out the first commissioning and if required as well as in accordance with the applicable regulations - however at least **twice a year** – a technical inspection by a skilled service technician or an authorized partner must take place. We recommend performing maintenance at the same time. Any due maintenance is indicated on the display of the BDE-D control unit. The interval for the edition of this message is determined by the number of opening cycles and/or the expiry of a defined operating period.
Regular maintenance and inspection of the automatic door by trained personnel authorized by the manufacturer provides the best guarantee for a long service life and an error-free operation.
We recommend the conclusion of a service contract with the respective service department in your region.

IMPORTANT

A listing of recommended spare parts is supplied in the annex and is also available on request at your service department.

2.6 Operator duties

According to principles for inspecting automatic door systems, in particular according to case law of safety obligations, automatic door systems must be inspected by a qualified technician before commissioning and thereafter according to the manufacturer recommendation. It is particularly important for the protection of people, to observe and to comply with the requirements for public access facilities! The operator is responsible to fulfill the duties required for the door system.

Task	To be conducted by	Time of implementation	Entry in log book required
Final inspection	Technical expert	After ready for use installation of the door system	Yes
Maintenance and cleaning especially of the sensors for protection and tripping	Operator	Weekly or if required	No

⚠ CAUTION

Sensors for protection and tripping must be kept free from contamination and fogging in order to avoid malfunctioning of the system.

Function and safety check	Operator	Monthly	No
Regular maintenance	Technical expert	1 × per year, or according to country specific directives and regulations	Yes
Regular testing (inspection)	Technical expert	1 × per year, or according to country specific directives and regulations	Yes
Regular testing (inspection) for door systems in escape route	Technical expert	2 × per year, or according to country specific directives and regulations	Yes
Regular testing of fire doors	Technical expert	1 × per year, or according to country specific directives and regulations	Yes
Regular functional testing of lock for holding door open	Operator	1 × per year, or according to country specific directives and regulations	No
Regular testing of lock for holding door open	Technical expert	1 × per year, or according to country specific directives and regulations	Yes
Regular maintenance of lock for holding door open	Technical expert	1 × per year, or according to country specific directives and regulations	Yes

3 General technical data

NOTICE

Load capacity for lintel installations
The standard guidelines for load capacities on lintel installations can be found in the corresponding chapter

NOTICE

3 carriages required for door weight per wing > 90 kg
4 carriages required for door weight per wing > 125 kg

Noise emission:	< 45 dB
Protection class:	IP20

3.1 Door opening speed

Door opening speed (for max. 75% of authorized door weight)	D-STA D-TSA	0.7 m 1 sec.
	E-STA E-TSA	0.7m 1.5 sec.

3.2 Power supply data

	Product line 20		**Product line 21**		**22**
	Standard	DUO / RED	Standard	RED	Standard
Mains voltage	100-240 VAC	100-240 VAC	230 VAC	100-240 VAC	230 VAC
Rated power	90 W	90 W	85 W	90 W	120 W
Fuse protection	4 AT	4 AT	3,15 AT	4 AT	3,15 AT
Standby power consumption*	approx. 25 W for all				

* including sensors, control unit and locking device

4 Operating instructions

The electronic control unit with display (BDE-D) has been designed to operate the automatic sliding door installation.

4.1 Selection of operating modes (BDE-D)

The electronic control unit BDE-D is a user-friendly input/output module to control and customize (optional) the system operation. The backlit LCD display informs about the system status by means of symbols and plain text. Error messages are displayed as text.

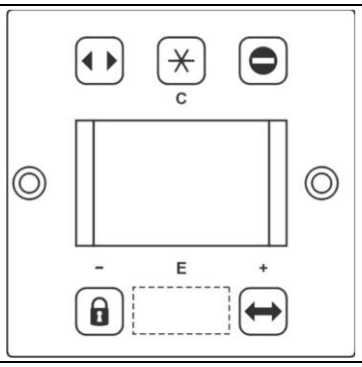

Button	Operating mode	Symbol displayed	Function
	Automatic	Automatic	▪ Unobstructed access through the system in both directions ▪ Maximum opening with
	Continuously open	Cont. open	▪ System remains open until another operating mode is selected
	One-way	One-Way	▪ System opens only in one direction (e.g. for shop closing time)
	Locked	Locked	▪ System is closed and locked (if there is a locking device) ▪ System remains locked even in case of power failure
	Reduced opening width	Automatic	▪ Unobstructed access through the system in both directions ▪ Reduced opening width

NOTICE

The reduced opening width is also effective with operating modes (One-way) and (Continuously open).

4.2 Selection of special functions

Key operation	Function	Display	Description
	Manual mode	Manual	▪ Press key twice ▪ System opens/stops on 2nd key stroke ▪ System can be operated manually **Back to another operating mode** ▪ Activation of the selected key (e.g. Automatic)
	Manual mode	Manual	▪ Press key for 2 seconds ▪ System can be operated manually **Back to another operating mode** ▪ Activation of the selected key (e.g. Automatic)
	Single opening	Locked	▪ System is closed and locked ▪ 1 keystroke unlocks the system (if available) ▪ An opening/closing cycle is performed ▪ Once closed, system locks again

4.3 Locking the control panel with the keyboard

IMPORTANT

Standard EN 16005 requires protection of the selection of the mode of operation of pedestrian automatic doors used as emergency exits so that they may not be inadvertently locked when the building is in use.

If a "locked" mode of operation is available, the mode of operation must be protected, e.g. by an access code or a key, so that changes can only be made by authorized personnel.

It is the responsibility of the operator of the pedestrian automatic door used as an emergency exit to lock the control panel into automatic position when the facility is being used.

Key sequence			Display	Description
Locking the control unit				
E	*		Automatic	▪ Undesired manipulation of the control unit is hindered ▪ Panel is locked ▪ Locked status of the BDE-D is displayed
Unlocking the control unit				
E	*		Automatic	▪ Free selection of operating modes and special functions is ensured

NOTICE

The installation remains in the mode of operation previously selected

4.4 Locking the control unit with a key (option)

IMPORTANT

Standard EN 16005 requires protection, for the mode selection of operation of pedestrian automatic doors, used as emergency exits so that they may not be inadvertently locked when the building is in use.

If a "locked" mode of operation is available, the mode of operation must be protected, e.g. by an access code or a key, so that changes can only be made by authorized personnel.
It is the responsibility of the operator of the pedestrian automatic door used as an emergency exit to lock the control panel into "automatic" position when the facility is being used.
The control panel BDE-D can be efficiently protected against unauthorized changes of operating mode by an additional key switch.

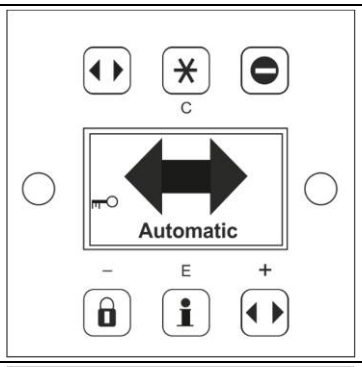

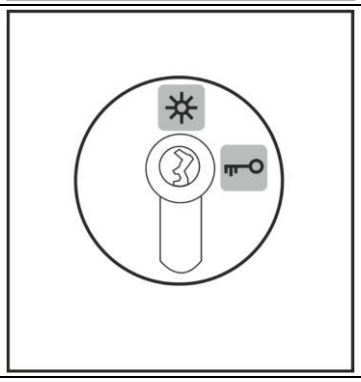

4.5 Selection of operating modes (BDE-M)

The mechanical operating unit BDE-M is equipped with a key switch. Different operating modes can be set with this key switch. The operating switch can be pulled off in any position.

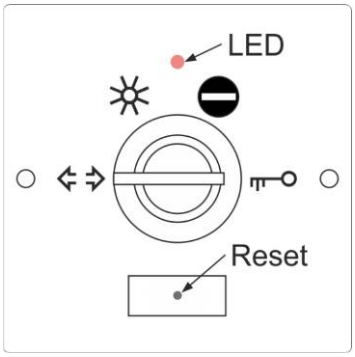

Key	Operating mode	Function
	Automatic mode with total opening width	This operating mode is the standard operating mode. Through triggering of a e.g. Radar, the door opens. After the pre-set door time delay, the door closes.
	Continuously open and manual mode	Door opens and stays in open position. The door can be moved manually.
	One-Way	The door opens only through a triggering of an e.g. radar which is on the inside of the door, or through a optional key operated contact (SSK).
	Locking	The door will be locked after a completed closing. The door can only be opened with the last pre-set opening width through a key operated contact (SSK). **Caution:** During a **Power loss** the opening of a locked door might be only possible with a optional battery pack or a manual locking device!

4.5.1 Operating mode display

The BDE-M has only 1 LED. The LED is lightening if mains voltage or battery voltage are available.

4.5.2 Reset-Button

This hidden button will be actuated with a 25 mm long paper clip.
Therefore there is a little hole in the middle of the logo.

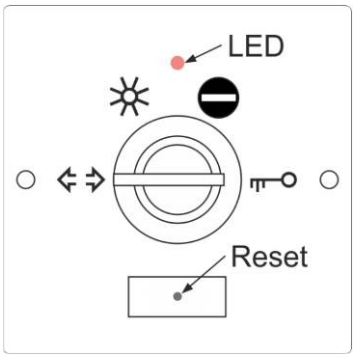

If the reset-button will be pressed for about 5 seconds, a software-reset will happen. The pre-set settings remain unaffected.

5 Manual opening and closing in case of failure

5.1 Manual opening (without manual unlocking device)

Initial situation: The door is disconnected from the mains, blocked in closed position and locked.

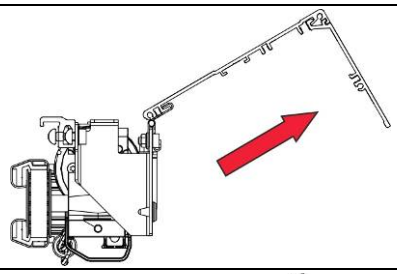	▪ Open the operator casing Note: If you pull near the hinges, it will help open the casing
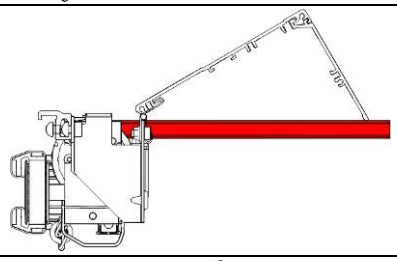	▪ Swivel out the red holding bar in order to keep the casing in open position
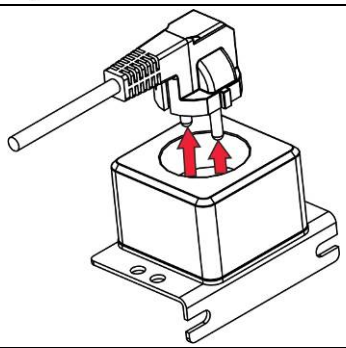	▪ Disconnect the door from the power supply ▪ The socket is located under the operator casing
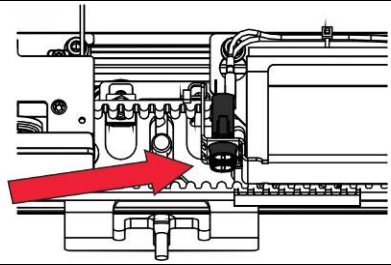	**Installations with in-built emergency battery:** ▪ Unscrew additionally the battery fuse ▪ The battery is located under the operator casing
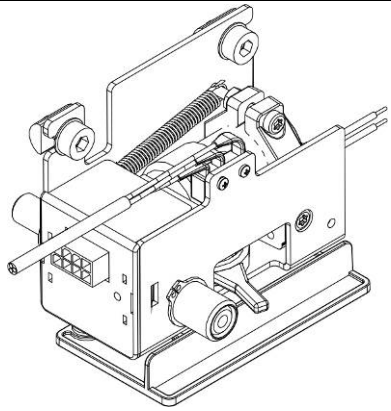 System 20	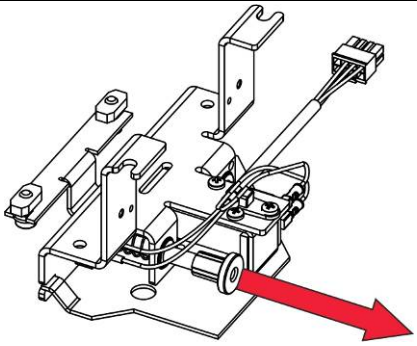 System 20-200
▪ The locking system is provided with an unlocking lever	▪ The locking system is provided with an unlocking pin. By **pulling**, it unlocks the door.

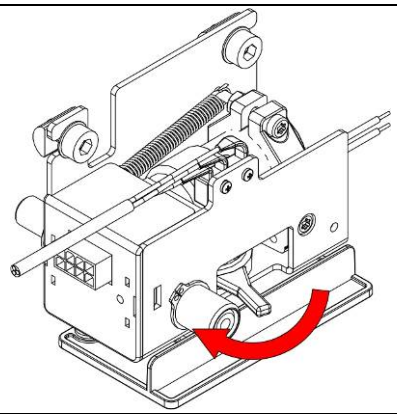	▪ The door unlocks and can be pushed open by hand
▪ Turn the lever clockwise	
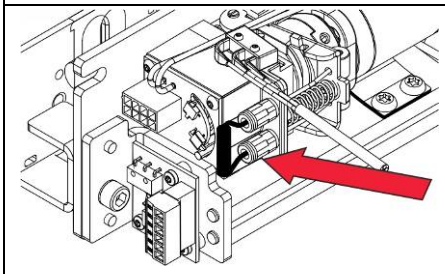 Rod locking mechanism MPV The locking system is provided with a rope loop	▪ Pull strongly on the rope loop ▪ The door unlocks and can be pushed open by hand
▪ Close the casing with a strong pressure on the area of the hinges	

5.2 Manual closing

Initial situation: Electric power is supplied. Door remains blocked in open position.

NOTICE

Depending on the kind of failure, the procedure for a manual closing will be different. Please follow the steps described below.

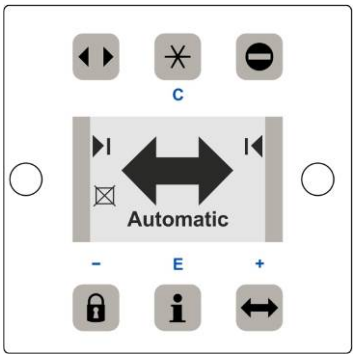

5.2.1 Manual closing - step 1

Key	Function	Display	Description
	Manual mode	Manual	▪ Press key twice ▪ Door can be opened or closed by hand **Temporary door operation** **(e.g. in case of low temperature outside)**
	Locked	Locked	▪ **Night locking** ▪ Press *additionally* the locked key ▪ Slide the door by hand to the closed position ▪ Door is closed and locked (if applicable) **Inform the service point** **(telephone number is displayed on the BDE-D)**

NOTICE

If the door cannot be moved by hand and locked, please follow the steps described as follows.

5.2.2 Manual closing - step 2

If the attempts to close and lock the door described under "step 1" have remained unsuccessful, it indicates a severe failure. Please proceed as follows:

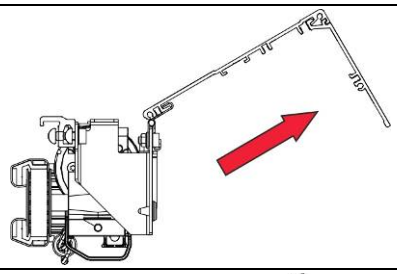	▪ Set the door in manual mode with the control unit (see chapter "Manual closing - step 1") ▪ Open the operator casing (swing open) Note: If you pull near the hinges, it helps open the casing
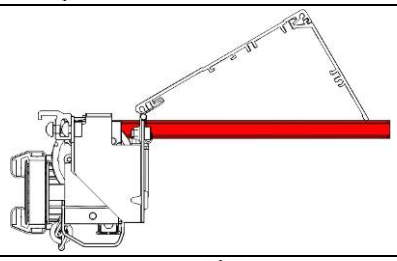	▪ Swivel out the red holding bar in order to keep the casing in open position
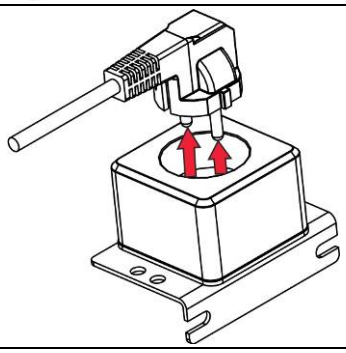	▪ Disconnect the installation from the power supply ▪ The socket is located under the operator casing

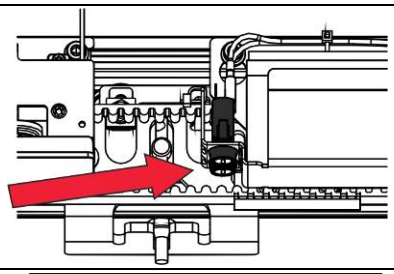	**Installations with in-built emergency battery:** ▪ Unscrew additionally the battery fuse ▪ The battery is located under the operator casing
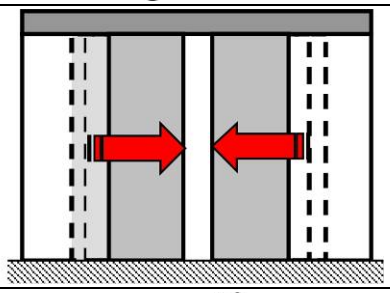	▪ Slide the door by hand to the closed position
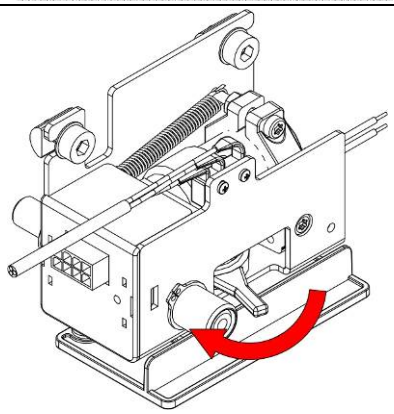 System 20 ▪ Turn the unlocking lever clockwise and hold it in this position so that the door can close completely ▪ The door will lock as soon as you release the unlocking lever	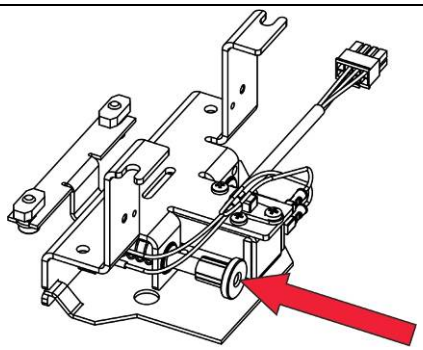 System 20-200 ▪ The door locks, if you push in the unlocking pin
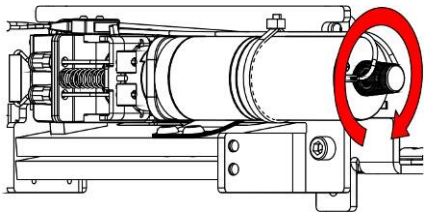 Rod locking mechanism MPV	▪ Turn the red button clockwise until you feel resistance and cannot go on turning ▪ Manually check that the door is properly locked ▪ Leaving the building is only possible through a second exit **Inform the service point** **(telephone number is displayed on the BDE-D)**

6 Operating door in emergency

In accordance with country-specific safety regulations (concept of emergency exit, etc.) the doors are fitted with an emergency opening device.

6.1 Emergency opening with current supply

By activating the emergency opening switch (optional), which must be placed beside the installation, the door will open as long as the operating mode Locked has not been selected. In this operating mode the door will remain locked.
To re-start the installation, the emergency opening switch must be reset by hand, either through a rotation or a pulling (different procedures depending on the version of the switch).

6.2 Emergency opening in case of power failure with a back-up battery (optional)

- If a back-up battery is fitted and parametrized as 'Battery operation', all functions of the automatic door will continue to be available.
- In case of a power failure, emergency opening is ensured by a back-up battery that opens the door once (except if the program is set to 'Locked').
- The number of door openings depends mainly on door weight and the battery's charging state.
- The last door operation in case of a weak battery (insufficient capacity) is selectable: 'Open' or 'Close'.
- If the door is in the 'Locked' state, it can be unlocked by means of the key switch/push button (optional).

6.3 Emergency operating using Bowden cable (Option)

This device, available in several versions, is mounted inside and/or outside and allows the unlocking of the door, according to the procedure below.

6.3.1 Available versions

The available versions are illustrated below. They are basically identical in their function.

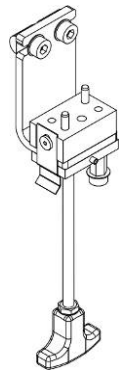

102-020808512

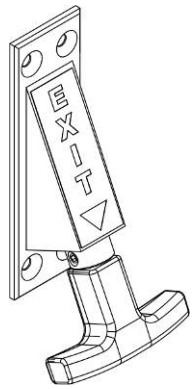

102-020808757

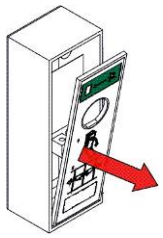

102-014102000

6.3.2 Procedure for an emergency opening

Emergency opening	
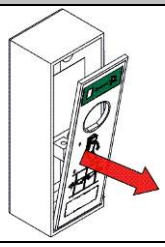	▪ Open the unlocking flap ▪ Pulling the unlocking flap downwards unlocks the door ▪ Display on the BDE-D → Error No. 31 / Emergency stop ▪ The door can be slid open by hand

6.3.3 Closing and locking the door

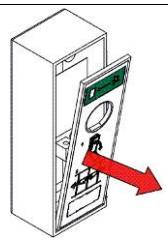	▪ Activate the emergency opening ▪ This causes the locking device to be unlocked
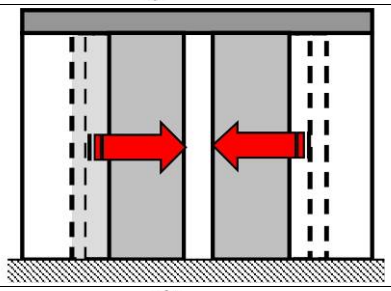	▪ Slide the door manually into the closed position ▪ Keep the door leafs in the closed position
	▪ Close the unlocking flap ▪ The door is now locked
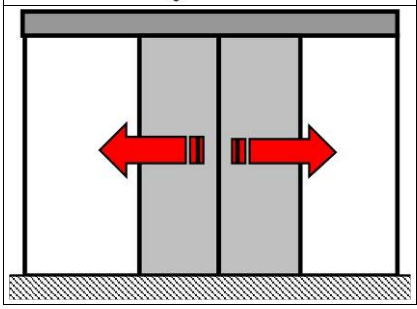	▪ **Check manually if the door is really locked**

NOTICE

Same procedure for the other operating elements

7 Behavior in event of faults

In the event of an irregularity or malfunction, different displays are shown depending on the control unit connected.

NOTICE

If the door performs a slow opening or closing movement, this can indicate a deliberate automatic redundancy test.

7.1 Display on the control unit

- Status messages are displayed with status number and text.
- The display changes alternately from white to black.
- After 10 seconds, the telephone number of the relevant service center is alternately displayed.

7.2 Possible troubleshooting

- Based on the status display some errors can sometimes be eliminated
- If you are not sure, please contact the relevant service center
- Before you call, write down the data displayed on the BDE-D. This information provides the technician with important informations for troubleshooting
- If several status messages are active at the same time, they are numbered: e.g. error 1 / 2
- Pressing the E-button permits to navigate from one error message to the next one

Example:

Which information?	Procedure	How displayed? (Example)
Status text and number	▪ It is automatically displayed on the BDE-D	3 AKI > active / 3 AKI > active
Software-Versions	▪ Press the following button on the BDE-D for 2 seconds E	Software STA20 V X.XX BDE-D V X.XX

7.3 Resetting the control module

In some cases, the malfunction may be remedied by restarting the control unit. Please proceed as described below.

- Make sure that the drive cladding is closed and that nobody is obstructing the system or approaching it, thereby triggering an opening of the system.

E		Press > 5 seconds
C	No	No / Reset control? / Yes
E	Yes	

- The system will reset
- The first movement after a reset occurs at reduced speed
- If a fault is still displayed on the control unit after resetting, please contact our service centre, **stating the error message.**

7.4 Control unit BDE-D does not react

If the control panel does not react when the keys are pressed or if no message appears on the display, a reset of the control panel could eliminate the problem.
Proceed as follows:

RESET HARDWARE BDE-D	
E	Press E key > 12 seconds
	Display without any message
	Connecting to control unit.... 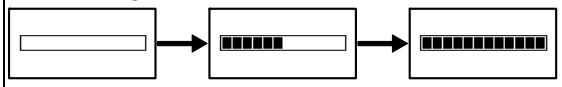 Connection has been established (example) Software STA20 V X.XX BDE-D V X.XX

- After resetting, the control panel is again operational
- If this is not the case, please inform our service center

8 Functions and safety check

8.1 General remarks

According to the legal provision in force, the operating entity of the automatic door is responsible for its maintenance and for the user's safety, as soon as the installation has been handed over.
The regular inspection of single elements by the operator requires little time investment and reinforces the prevention of accidents caused by an inappropriate use of the door.

Testing
As part of testing, visual and functional tests are conducted, ranging in particular over door leaves, guides, bearings, limiting devices, sensors as well as over safety at danger points due to crushing, shearing or drawing-in.
In addition, with door systems installed on escape routes, all the safety devices of the escape route function are controlled.
To provide the operator with documentation and information, the test result is recorded on a check list and must be kept in the logbook by the operator for at least **one year**.
Maintenance
During maintenance, bearings, sliding points and power transmission are cleaned and adjusted. Relevant fixing screws are controlled and retightened if necessary.
Then, functional testing is carried out for switching devices, drives, control units, force or energy storing devices or command controllers. The safety devices are adjusted and all the motion sequences including the final points are set.
A test run with final overall control of the door system is executed.
To provide the operator with documentation and information, the state of the door installation is recorded on a check list and must be kept in the logbook by the operator for at least **one year** until the next test / maintenance.

IMPORTANT

The test frequency is at least once a year according to the manufacturer's stipulations.
The maintenance frequency is at least twice a year according to the manufacturer's recommendations.

IMPORTANT

A listing of recommended spare parts is supplied in the annex and is also available on request at your service department.

IMPORTANT

Tests and maintenance should only be carried out by a specialist or a person specifically trained for that. The authorisation of these persons exclusively lies with the manufacturer. Extent, results and time of the periodical inspection must be recorded in the logbook. These records must be kept by the operator.

8.2 Monthly inspection work to be carried out by the operating company

The monthly inspection and maintenance of individual elements by the operating company requires little time and serves the reliable function, increased service life and operational safety of the system.

Test / inspection	Procedure	Expected result
Motion detector	▪ Approach the door at normal speed (from the inside and outside) ▪ If necessary, clean the sensors (motion detectors), in particular the external sensor(s) ▪ Note that steaming up of the sensor, for instance due to warm, moist indoor air escaping and condensing on the colder external motion sensor, can prevent the door from closing. Therefore, ensure that the indoor air is dehumidified or wipe the external sensor dry if necessary.	▪ The sensor must cover the entire passage width ▪ The door is opened early and at an adequate speed to allow an unimpeded passage
Door wings / side parts	▪ Check the condition of the panes ▪ Check the condition of the gaskets / profiles	▪ No damaged panes ▪ No torn out gaskets (energy loss) ▪ The door is the "business card" of your company. Therefore make sure that the door is in perfect condition
Door leaf guides 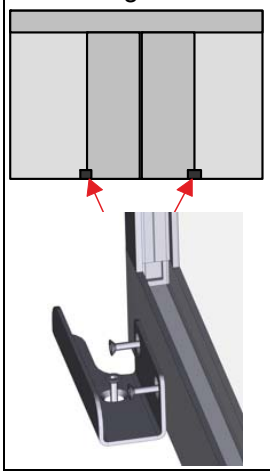	▪ Check the door leaf guides ▪ These may have been damaged by impacts (e.g. by shopping trolleys) ▪ Intensive use and exposure to dirt can lead to extraordinary wear and tear on door leaf guides	▪ The door leaf must be properly guided ▪ Bottom and vertical door profiles exhibit no scratch marks ▪ The door leaf guide must not generate any unusual noises during opening/closing

Test / inspection	Procedure	Expected result
Continuous floor guide (instead of punctual door leaf guide) 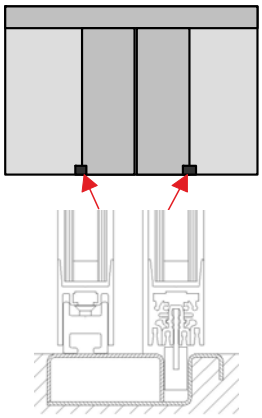	▪ Set the door to manual operation (see chapter "Selecting special functions") ▪ Clean all guides from dirt, cigarette butts, etc.	▪ The door leaf must be properly guided ▪ The movement of the door must not be obstructed by dirt
Drive guard cover	▪ Check the fastening of the drive guard cover	▪ It must be completely closed and reliably engage in the hinges
Protective wing (optional - depending on national regulations) 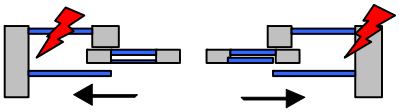	▪ Check the mechanical condition of the protective wing ▪ In particular, check the closing mechanism	▪ A protective wing should prevent all crushing and shearing points

9 Recommended and planned spare- and wear parts

Spare part/Wear part	Interval
* CO48 (Silicon or Rubber)	1 year
* Pulley CO48	3 years
Battery	3 years
Antistatic brush	3 years
Door leaf guide (plastic)	3 years
Guiding pad	3 years
Safety blocking ball (TOS Break-out system)	5 years
Pulley	If wear is detected
Gear belt	If wear is detected
Roller, wheel	If wear is detected
Counter wheel	If wear is detected
Track	If wear is detected
Carriage + Track + Rubber damping profile	If wear is detected
Belt clamp	If wear is detected
Hinge (plastic) for cladding height 200 mm	If wear is detected
Locking device (VRR)	If wear is detected
Motor	If wear is detected
Leaf central seal	If wear is detected
Lateral sealing profile	If wear is detected
Floor guide rail	If wear is detected
Light barrier	If wear is detected
Control	Breakdown/Failure
BDE Control unit	Breakdown/Failure
BBGV Green break glass housing	Breakdown/Failure
Others	Breakdown/Failure

* Mechanical power storage device for escape routes in France.

NOTICE

Depending on the version of the door installed, not all the listed spare and wear parts are installed.

Contact

➔ record UK limited
Head Office: Unit D, 9 Watt Place - Hamilton International Park - Blantyre - G72 0AH - UK
Central Office: Batley Business Centre - Unit 40 - Annexe 2 - Technology Drive - Batley - Wf17 6ER - UK
Southern Office: 17 Invincible Road - Farnborough - Gu14 7QU - UK
tel.: +44 1698 376411 - fax: +44 1698 376422 - info@recorduk.co.uk - www.recorduk.co.uk

➔ record global export
agtatec ltd - Allmendstrasse 24 - 8320 Fehraltorf - Switzerland
tel.: +41 44 954 91 91 - e-mail: export@record.global - www.record.global

➔ Headquarters
agtatec ltd - Allmendstrasse 24 - 8320 Fehraltorf - Switzerland
tel.: +41 44 954 91 91 - e-mail: info@record.group - www.record.group

n° 102-020110469 - Manufacturer: agtatec ag - Allmendstrasse 24 - 8320 Fehraltorf - Switzerland